THE TOOL COMPANY

Superline PRO® Black Edition Modular System Upright Connector Double

OPERATOR INSTRUCTION MANUAL

Model No.

APMS30UCD

Important: Please read these instructions carefully. Note the safe operational requirements, warnings & cautions. Use the product correctly and with care for the purpose for which it is intended. Failure to do so may cause damage and/or personal injury and will invalidate the warranty. Keep these instructions safe for future use.

© Jack Sealey Limited

Table of Contents

1.	**Introduction**	**2**
1.1	Intended Use	2
1.2	Description	2
2.	**Safety Symbols**	**3**
3.	**Safety**	**3**
4.	**Specification**	**3**
5.	**Contents**	**4**
6.	**Assembly**	**4**
7.	**Consumables & Accessories**	**5**
8.	**Maintenance**	**5**
9.	**Warranty**	**5**
10.	**Aftersales Support**	**5**

1. Introduction

Thank you for purchasing a Sealey product. Manufactured to a high standard, this product will, if used according to these instructions, and properly maintained, give you years of trouble free performance.

1.1 Intended Use

The Superline PRO® Black Edition Modular System Upright Connector Double is designed to securely connect compatible Superline PRO® modular system components, providing alignment, stability, and support within a workshop storage installation. It is intended for use only with compatible Superline PRO® products.

1.2 Description

Supports wall cabinet and Model No's APMS30BEBP and APMS30BP hanging Back Panel.

© Jack Sealey Limited

All content in this manual, including but not limited to text, images, graphics and logos is the property of Jack Sealey Ltd. or its licensors and is protected by copyright, trademark, and other intellectual property laws. You may not reproduce, distribute, modify, or otherwise use any content without prior written consent.

Disclaimer: All errors and omissions excluded. It is our policy to continually improve products and as such we reserve the right to alter data, specifications and component parts without prior notice. See **www.sealey.co.uk** for the latest information.

Country of origin: China.

2. Safety Symbols

Refer to instruction manual

Wear protective gloves

3. Safety

! **WARNING!** Read and understand these instructions before assembly and use.

! **WARNING!** Ensure all components are securely fastened before use.

- Install the connector only with compatible Superline PRO® modular system products.
- Wear appropriate safety footwear and gloves during assembly to reduce the risk of injury.
- Check all connections regularly and tighten any loose fixings.
- Keep children away during assembly.
- For ease of assembly, it is recommended that two persons work together.

⃠ **DO NOT** overload the storage system or any connected components.

⃠ **DO NOT** modify the connector or use it for purposes other than its intended use.

4. Specification

Model No:	**APMS30UCD**
Overall Size (W x D x H):	78 x 30 x 1420mm

© Jack Sealey Limited

5. Contents

The following fixings are supplied with each bracket

QTY	Description
10	M6 x 16mm Hex Bolt
10	M6 Nut
10	12 x 6 x 0.8mm Flat Washer

Bracket	Single Wall Bracket	Double Wall Bracket
Attaching wall bracket to back panel	Use fixings supplied with wall bracket 5 of each M6 x 16mm Hex Bolt M6 Nut 12 x 6 x 0.8mm Flat Washers	Use fixings supplied with wall bracket 10 of each M6 x16mm Hex Bolt M6 Nut 12 x 6 x 0.8mm Flat Washers
Attaching wall bracket to Wall Cabinets Base Cabinets	Use fixings supplied with cabinets 4 of each M8 x 16mm Hex Bolt 18 x 8.5 x 1.2mm Flat Washer 14 x 8.8 x 2.6mm Spring Washer	Use fixings supplied with cabinets 8 of each M8 x 16mm Hex Bolt 18 x 8.5 x 1.2mm Flat Washer 14 x 8.8 x 2.6mm Spring Washer

6. Assembly

Step.1

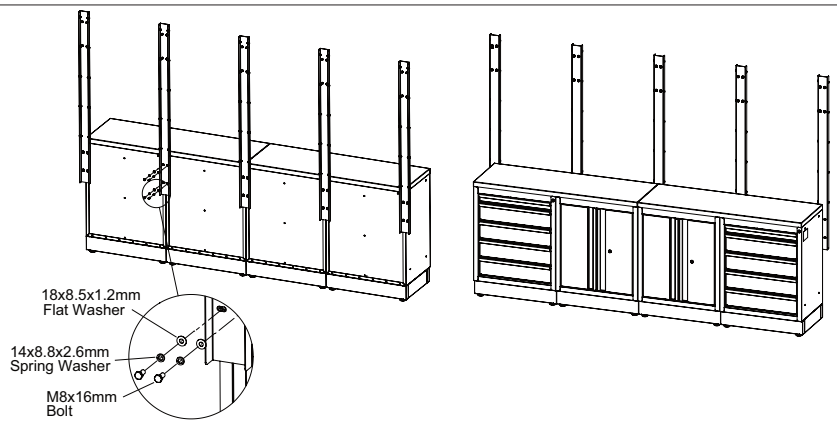

Step.2

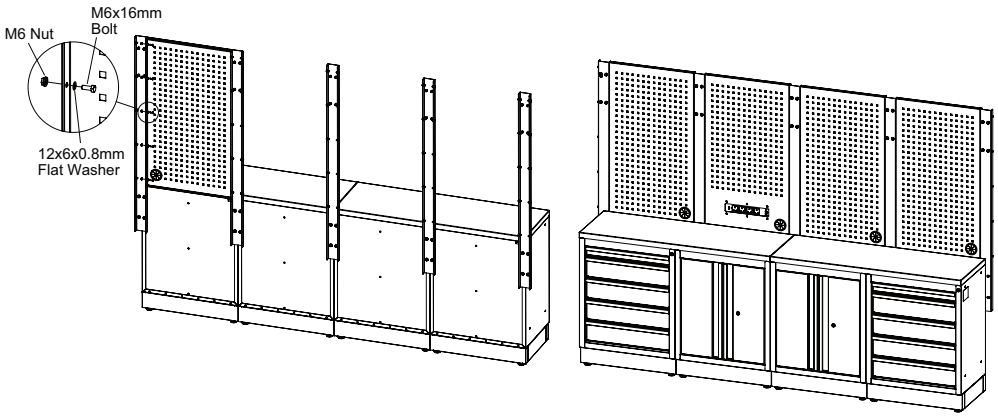

Tighten with wrench (not included)

7. Consumables & Accessories

A wide range of consumables and accessories are available.

Visit www.sealey.co.uk to explore our extensive range.

8. Maintenance

- The Superline PRO® Black Edition Modular System Upright Connector Double requires minimal maintenance. Periodically inspect the connector and fixings to ensure they remain secure and free from damage. Clean with a soft cloth and a mild detergent solution to remove dust, dirt, and workshop residues.

DO NOT use abrasive cleaners, solvents, or corrosive chemicals, as these may damage the finish. Replace any damaged or missing components before use to maintain the stability and integrity of the modular storage system.

9. Warranty

- Guarantee is 60 months from purchase date, proof of which is required for any claim.

Please note that guarantee claims must be made via the place of purchase where you may need to provide proof of purchase. All consumable items are under no warranty period. All warranties exclude general wear and tear and misuse, see our terms of business for more details.

10. Aftersales Support

We are committed to supporting our products throughout their lifetime.

- If your product is outside of the warranty period, we offer an extensive range of spare parts along with expert technical advice to help keep your equipment in working order.
- Our technical team is on hand to assist 8.30am-5.00pm Mon-Fri with fault finding, repairs and general product queries.

  Telephone 01284 757505

  Email: technical@sealey.co.uk

If required, products can also be returned to Sealey or one of our authorised repair agents for inspection, servicing or repair at a reasonable cost.

Product Registration

It's quick and easy to register your warranty online at www.sealey.co.uk. Just log in or create a free MySealey account, then head to the 'My Products' section to fill out the short warranty registration form. If your product is advertised with a free extended warranty upon registration, this will activate your extended warranty.

Environment Protection

Recycle unwanted materials instead of disposing of them as waste. All tools, accessories and packaging should be sorted, taken to a recycling centre and disposed of in a manner which is compatible with the environment. When the product becomes completely unserviceable and requires disposal, drain any fluids (if applicable) into approved containers and dispose of the product and fluids according to local regulations.

Jack Sealey (EU) Ltd t/a Sealey Group Farney Street, Carrickmacross, Co. Monaghan, A81 PK68 Ireland
Jack Sealey Ltd t/a Sealey Group Kempson Way, Suffolk Business Park, Bury St Edmunds, Suffolk, IP32 7AR UK
Tel: 01284 757500 ▪ **Email:** sales@sealey.co.uk ▪ **Web:** www.sealey.co.uk

© Jack Sealey Limited